BT029-150/Terminal

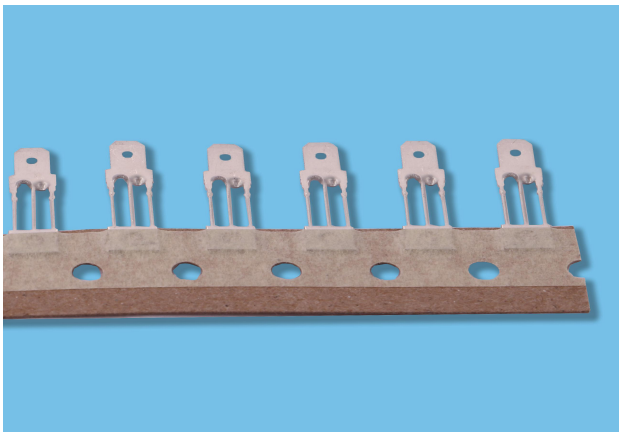

Features

The BT029-150 fuse terminal is made of copper with nickel plated surface. It is mainly used for connections in electrical circuits. This specification refers to model BT029-150.

- Material: copper H65, semi-hard
- Fog tin plating surface: 3~6 μm
- Pb- and Halogen-free, RoHS compliant
- Smooth Surface
- Soldering temperature: 260±5℃
- Nickel plated
- After tape, one box quantity is 2000 pcs

Dimensions (unit in mm)

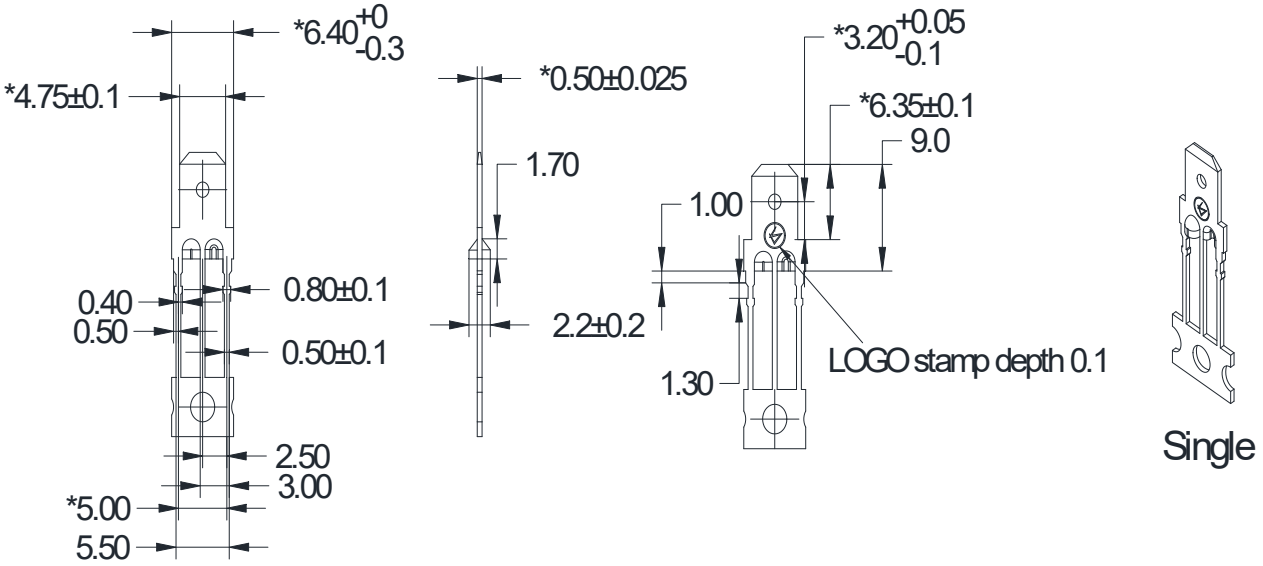

Ordering Information

Series	Part No.	Supplementary Code	Qty
BT029-150			

Sales Contact
sls01@beterfuse.com

Technical Support
Kenny@betterfuse.com

National High-tech Enterprise
SC 32C National Technical Committe Member of China
Intertek ISO 9001 Certificated Company
Intertek ISO 14001 Certificated Company
Intertek QC 080000 Certificated Company
NQA IATF 16949 Certificated Company

国家高新技术企业
SC 32C 国内专家组成员单位
ISO 9001 认证企业
ISO 14001 认证企业
QC 080000 认证企业
IATF 16949 认证体系